Ferla Vending Bike
Dimensions and specifications

*All dimensions are rounded to the nearest half-inch. Sizes and weights may vary based on selected features and custom configurations.

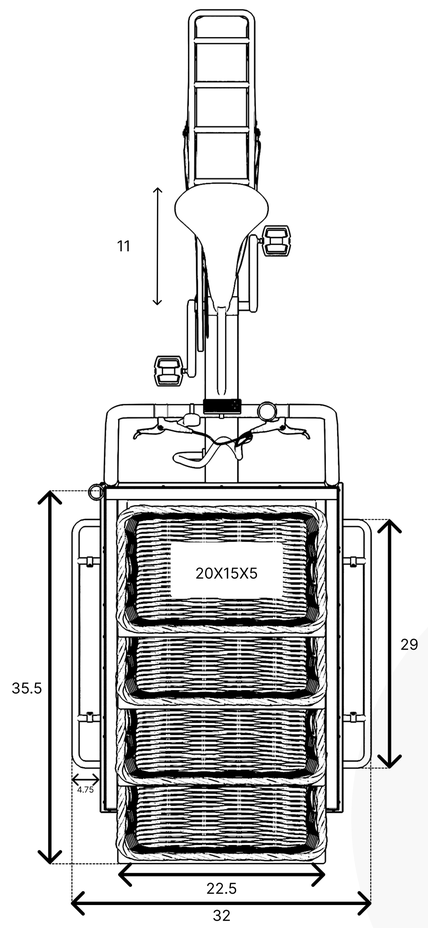

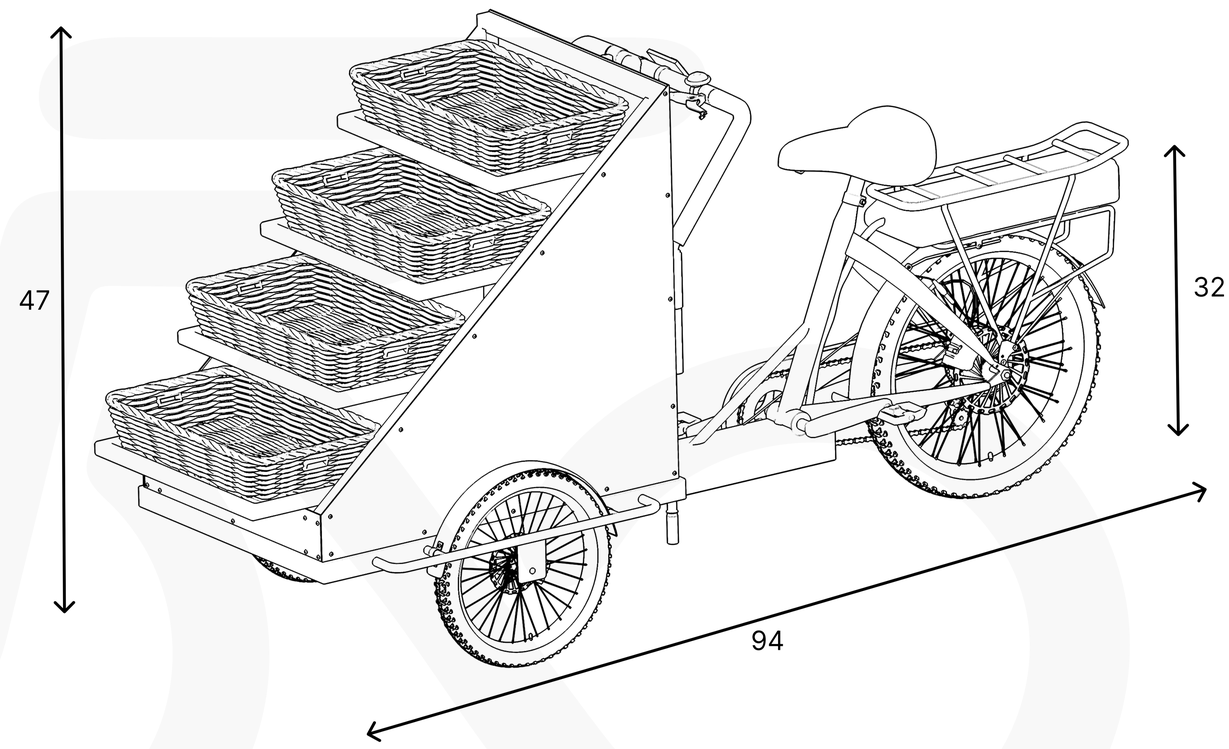

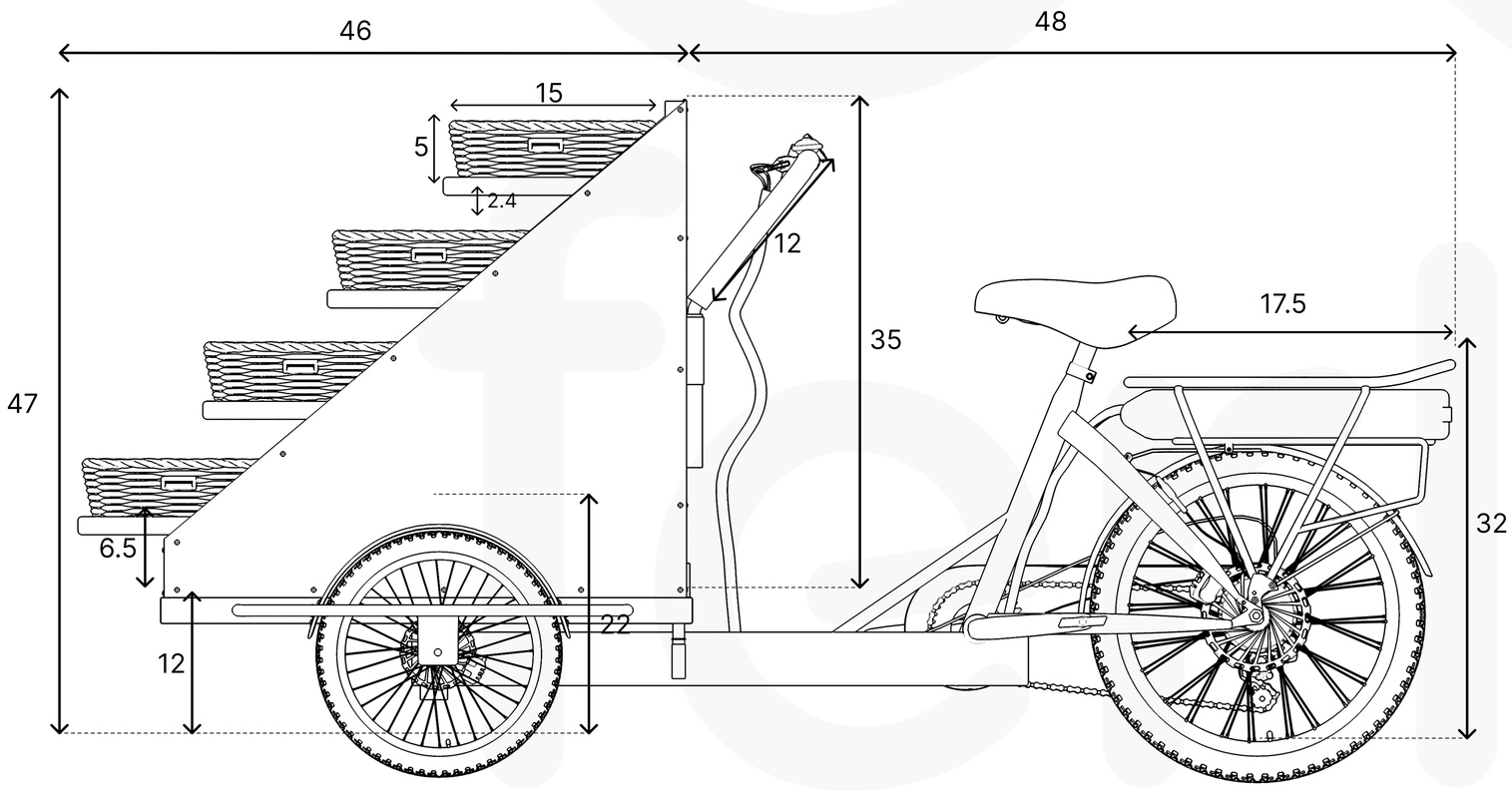

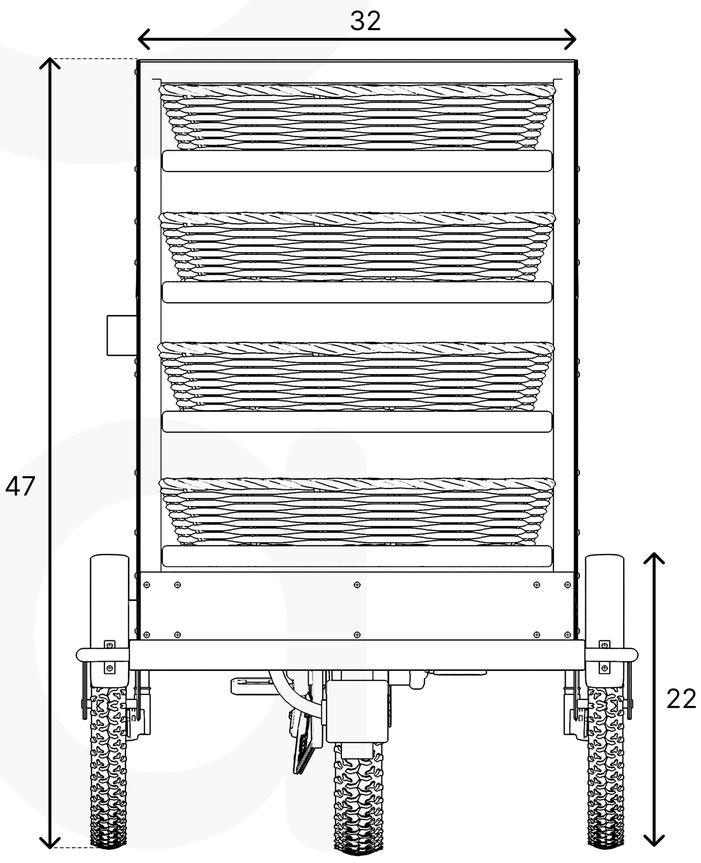

Dimensions

Full Length (Inc. Bike)	94”
Width/With wheels	22.5” / 32”
Height	47”
Single Basket Volume	0.87 cubic feet.

Specifications

Material Box/Frame/Basket	NSF Grade Wood/Steel/Wood
Wheels and Tires	19" x 2.25" Puncture Resistant Fat Tires
Motor (Optional)	M100 250W/36 volt Rear Hub with up to 45nm Torque
Pedal Assist Battery (Optional)	36V/10.4 AH Lithium Ion Battery, Certified CE, UN38.3, MSDS
Gears	Shimano 7 Speed System
Brake System	Teboka Mechanical Disc Brake System W/Integrated Parking Brake