Ferla Mini Cart
Dimensions and specifications

*All dimensions are rounded to the nearest half-inch. Sizes and weights may vary based on selected features and custom configurations.

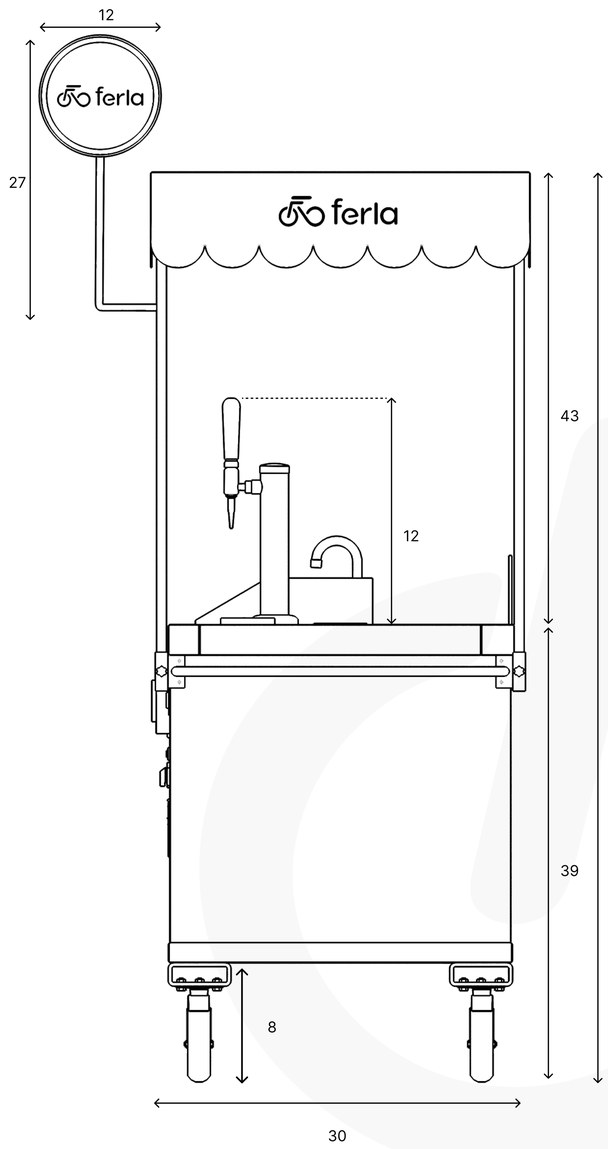

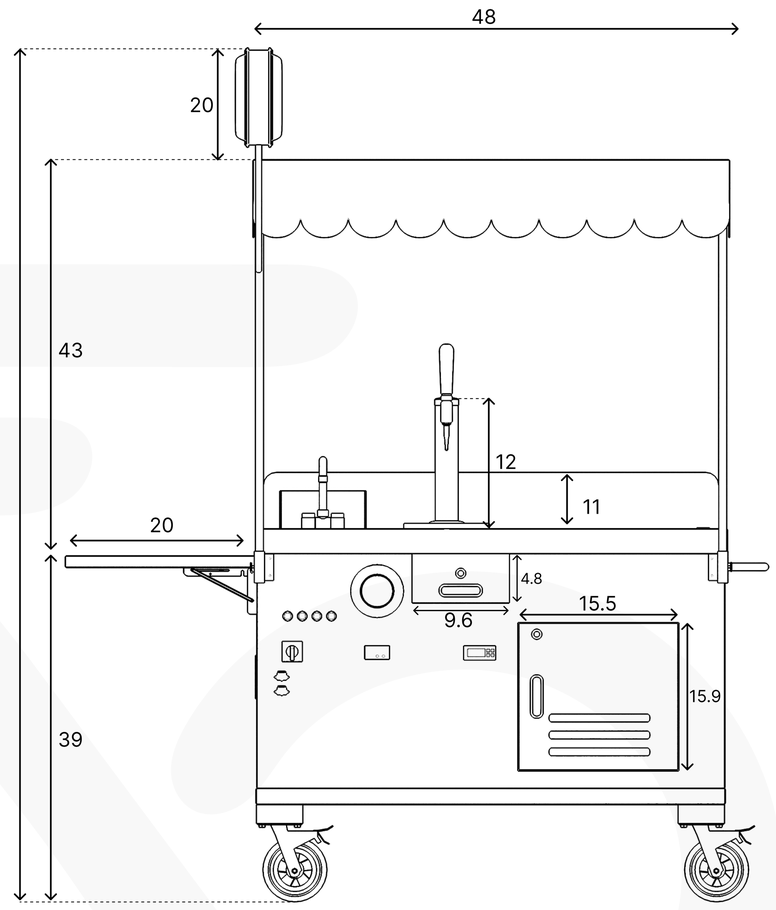

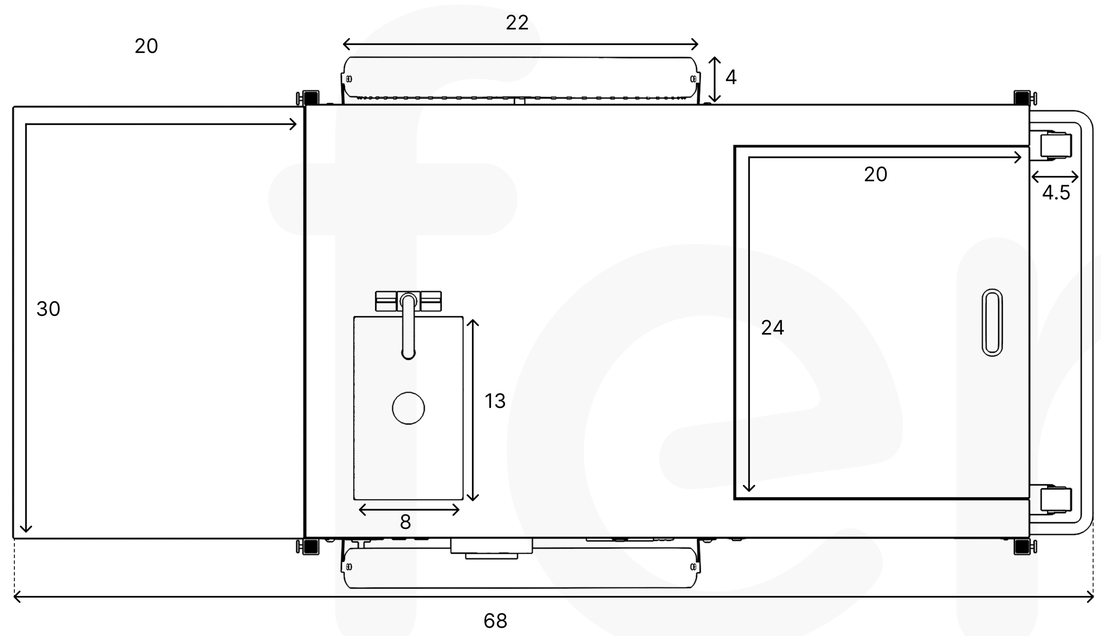

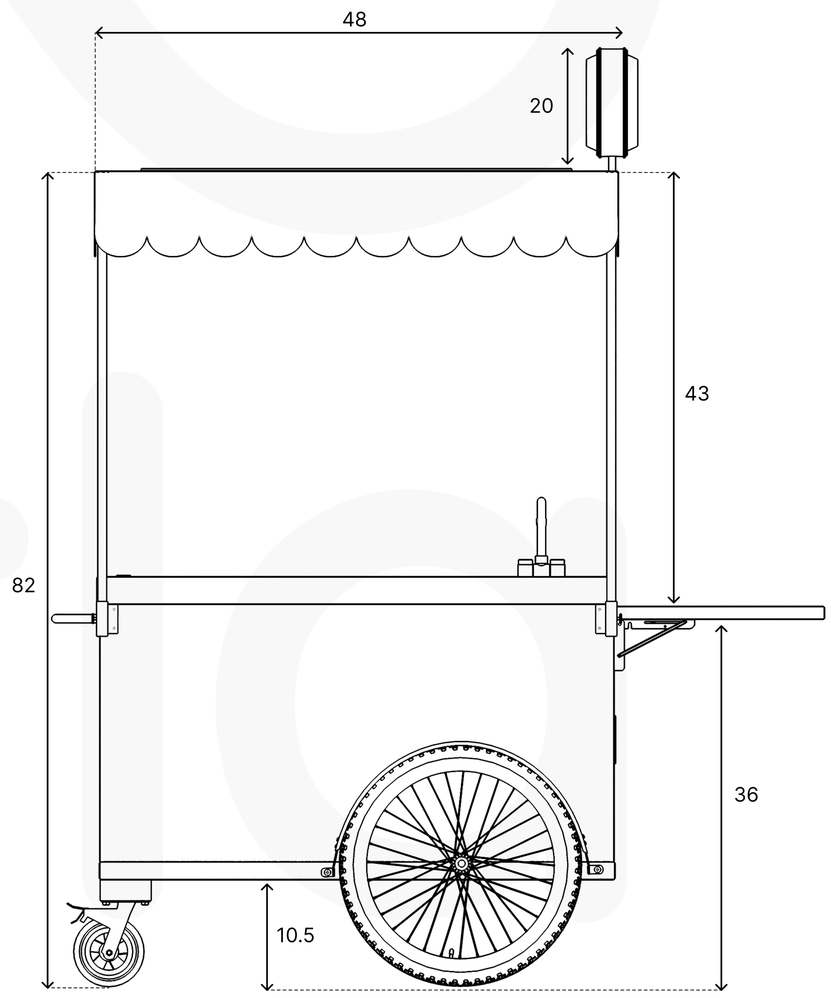

Dimensions

Full Length (Inc. Handle) / With Extended table	48” / 68”
Width/With Big Wheels	30” / 38”
Height/With Canopy/With LED Logo Sign	39” / 82” / 101”
Gross Weight	300 lbs. - 400 lbs.
Max Load Capacity	400 lbs.
Work Surface (inc. optional sink) / With Extended Table	9.06 ft² / 13.23 ft²
WS Extendable Table Dimensions	20” x 30”
Sink Dimensions (Optional)	13” x 8” x 6”
Small Refrigerator/Freezer Internal Dimensions (Optional)	20" x 12.5" x 18.5"
Solar Panel (Optional)	50.4” x 26” x 0.12”

Specifications

Material Box/Frame/Counter Top	NSF Grade Wood/Steel/Wood or Stainless Steel
Wheels and Tires	19" x 2.25" Puncture Resistant Fat Tires Big Wheels(Optional) with 6" Heavy Duty Caster Wheels
Power System	100Ah AGM Deep Cycle Battery
Certifications & Protection	CE and ROHS Certified.IPX5 Waterproof Rating
Lighting	Overhead LED Canopy Lights.
Sneeze Guards	Acrylic Food Grade Sneeze Guards
Water Heater (Optional)	Chronomite Instant Hot Water Heater: 120V-277V I Power Output 1.8-9.6kw
Water System (Optional)	Stainless Steel Sink, 5 Gal. Clean & Waste Water Tanks, Cold/Hot Faucet, Battery Operated Water Pump
Small Refrigerator/Freezer (Optional)	Battery Operated Commercial Grade Freezer with 3.25 Cu. Ft. of Refrigerator/Freezer space.
Solar Panel (Optional)	100W, VMP 18V, Imp 5.56 amp, Voc 220, Sc 6.1 A, 30 Degrees Flexible Bend