Ferla Mini Bike
Dimensions and specifications

*All dimensions are rounded to the nearest half-inch. Sizes and weights may vary based on selected features and custom configurations.

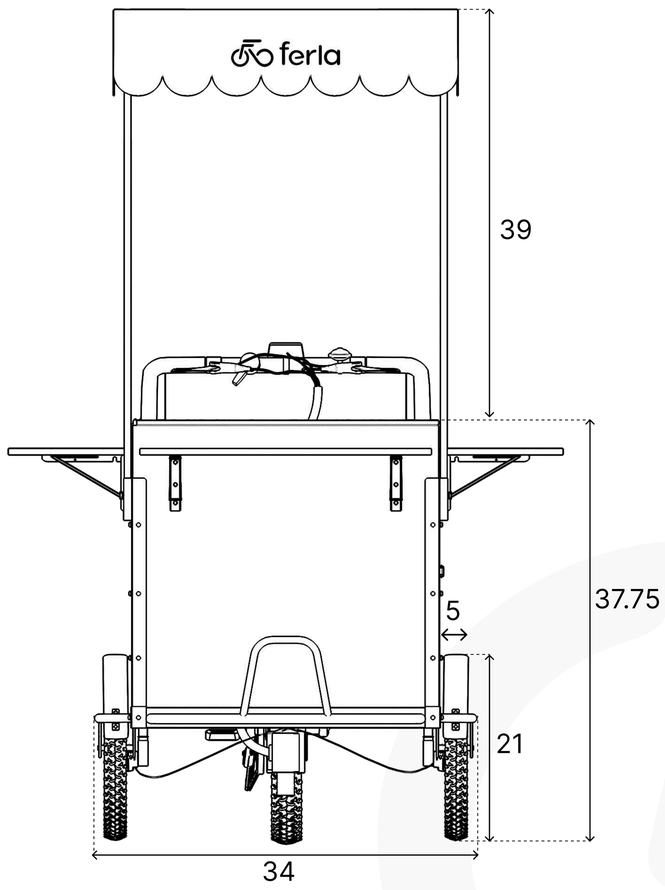

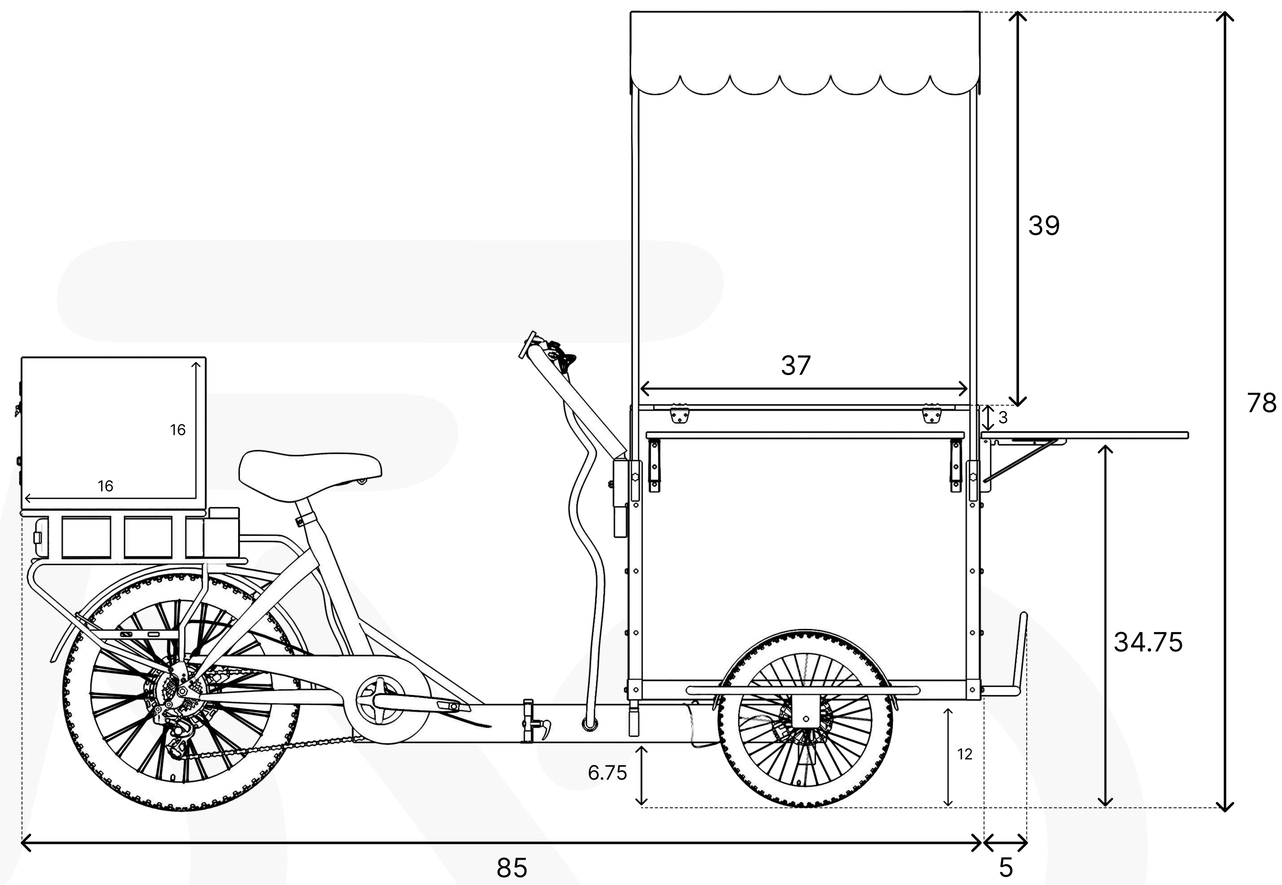

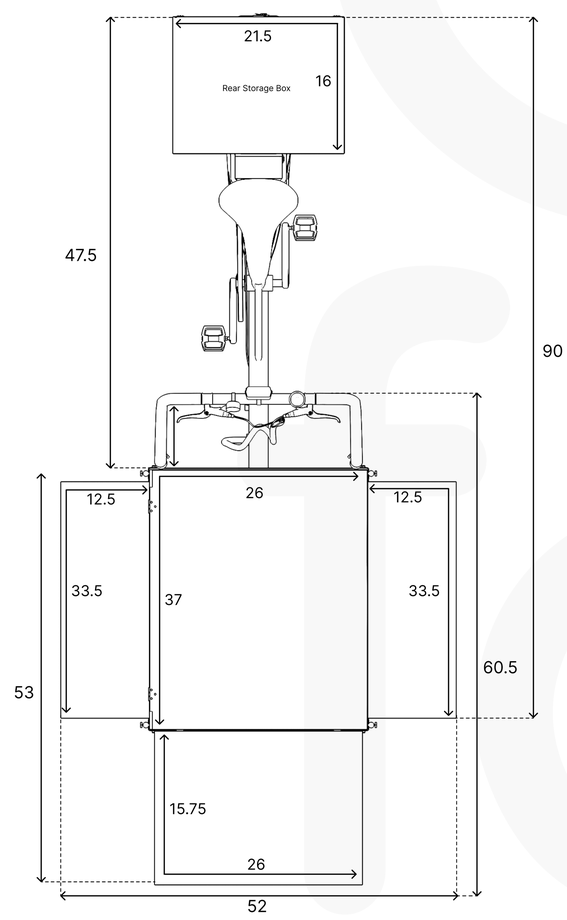

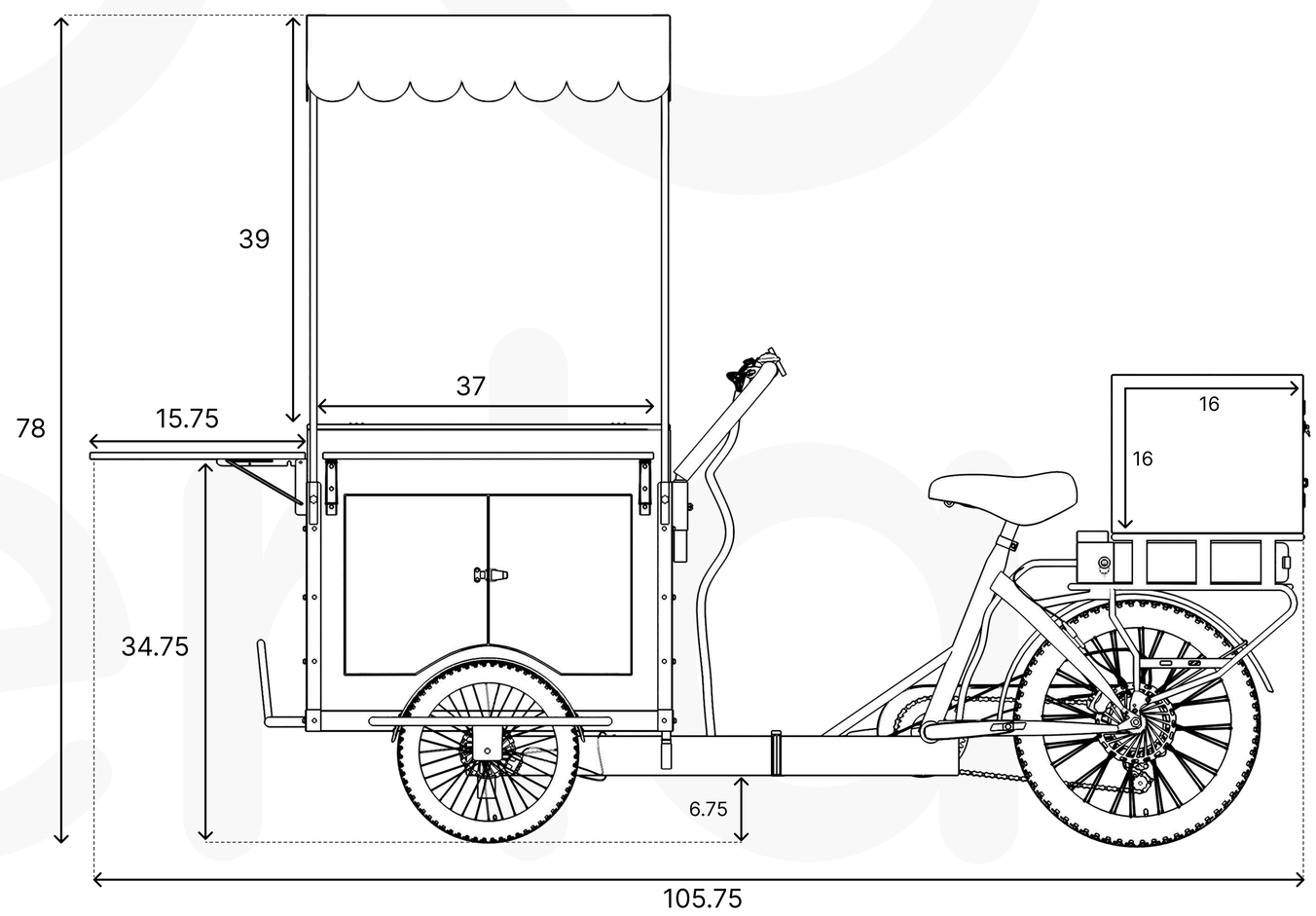

Dimensions

Full Length (Inc. Bike) / With Extendable Table	90" / 100"
Width/With Wheels	34”
Height/With Canopy	37.75” / 78”
Gross Weight	350 lbs.
Max Load Capacity	500 lbs.
Work Surface / With Extendable Tables	6.68 ft² / 15.57 ft²
Rear Stoarge Box Dimensions (optional)	16” x 16” x 21.5”
Front Extendable Table Dimensions / Side	15.75” x 26”
Front Extendable Table Dimensions / Front	33.5” x 12.5”

Specifications

Material Box/Frame/Counter Top	NSF Grade Wood/Steel/Wood
Wheels and Tires	Front 20" x 2.125", Rear 24” x 2.25”, Puncture Resistant Fat Tires
Motor (Optional)	M145 500W/48 volt Rear Hub with up to 60nm Torque
Pedal Assist Battery (Optional)	48V/13AH Lithium Ion Battery, Certified CE, UN38.3, MSDS
Gears	Shimano 7 Speed System
Brake System	Pioway Front & Rear Hydraulic Brake System (Electric), Pioway Hydraulic Disc Brakes (Non-Electric)
Certifications & Protection	CE and ROHS Certified.IPX5 Waterproof Rating
Lighting	Integrated Front Light and Rear Brake Light (Electric Models)