Ferla Grill Bike
Dimensions and specifications

*All dimensions are rounded to the nearest half-inch. Sizes and weights may vary based on selected features and custom configurations.

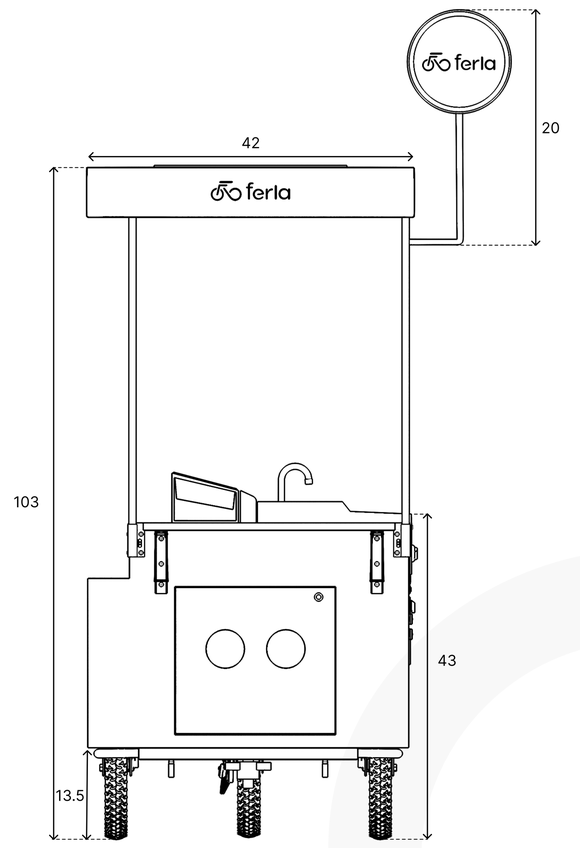

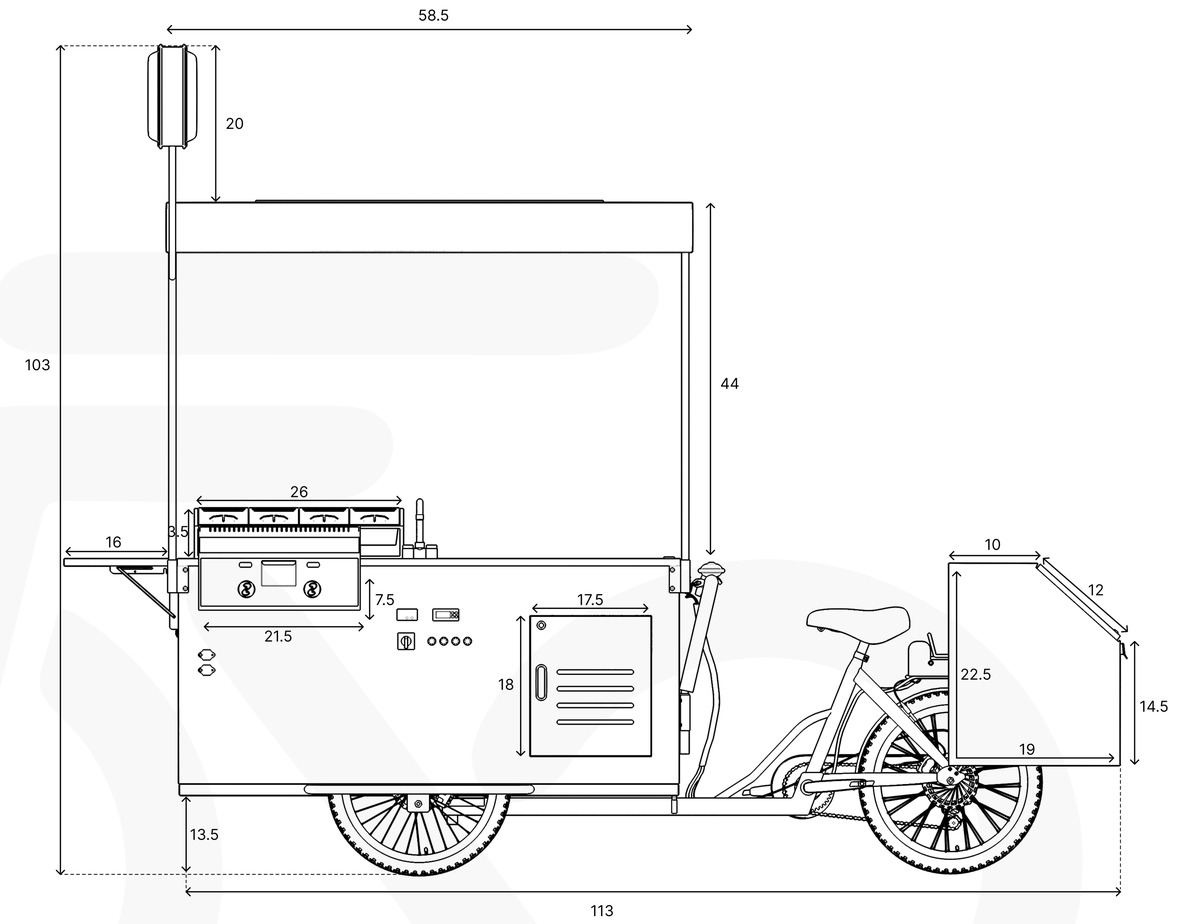

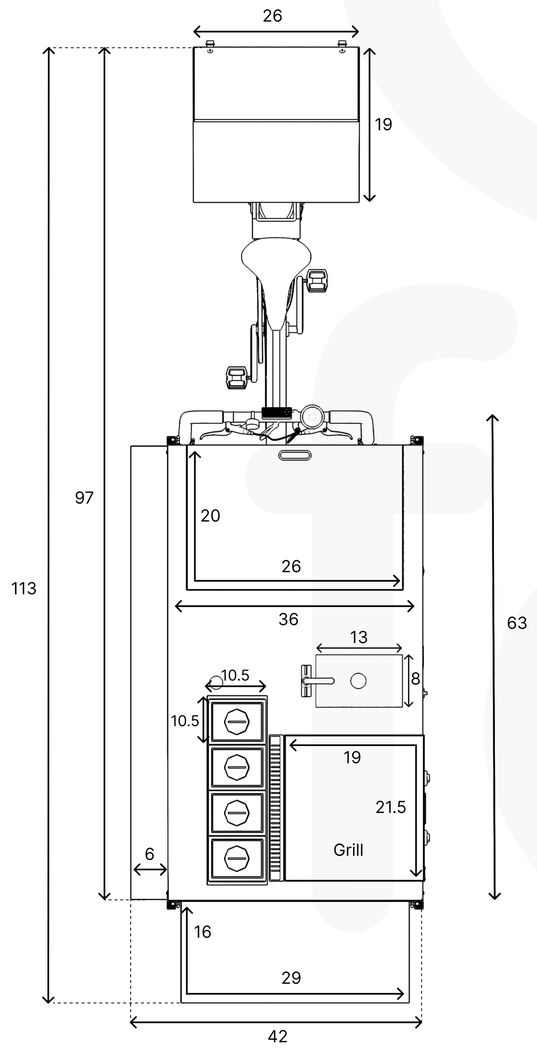

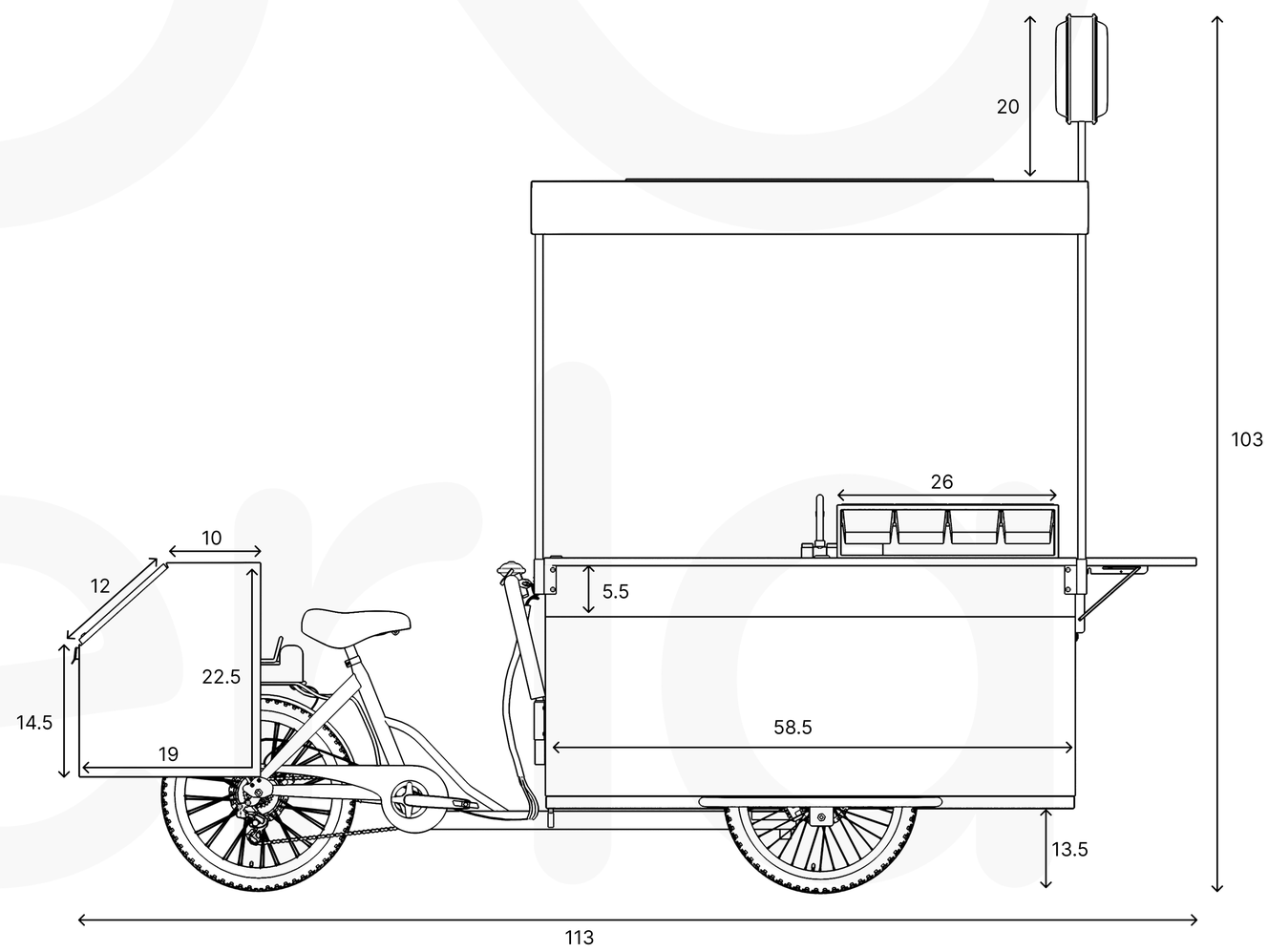

Dimensions

Full Length (Inc. Bike) / With Extended Table	113” / 129”
Width	42”
Height/With Canopy/With LED Logo Sign	43” / 83” / 103”
Gross Weight	500 lbs - 750 lbs.
Max Load Capacity	500 lbs.
Work Surface (inc. optional sink)	53" x 27.5"
Rear Stoarge Box Dimensions	18.89" x 26.18" x 27.5"
WS Extendable Table Dimensions	16” x 29”
Sink Dimensions (Optional)	13” x 8” x 6”
Refrigerator/Freezer Dimensions	20" x 12.5" x 18.5"
Flat Top Grill	21.5” x 17”

Specifications

Material Box/Frame/Counter Top	NSF Grade Wood/Steel/Stainless Steel
Wheels and Tires	19" x 2.25" Puncture Resistant Fat Tires
Power System	100Ah AGM Deep Cycle Battery
Motor	M145 500W/48 volt Rear Hub with up to 60nm Torque
Pedal Assist Battery	48V/13AH Lithium Ion Battery, Certified CE, UN38.3, MSDS
Gears	Shimano 7 Speed System
Brake System	Pioway Front & Rear Hydraulic Brake System
Certifications & Protection	CE and ROHS Certified.IPX5 Waterproof Rating
Lighting	Overhead LED Canopy Lights and LED Logo Sign
Water System	Stainless Steel Sink, 5 Gal. Clean & Waste Water Tanks, Cold/Hot Faucet, Battery Operated Water Pump
Refrigerator/Freezer	Battery Operated Commercial Grade Freezer with 1.74 Cu. Ft. of Refrigerator/Freezer space.
Grill Specifications	Propane Flat Top Grill with (4) Stainless Steel Food Storage Containers