Ferla Grande Bike
Dimensions and specifications

*All dimensions are rounded to the nearest half-inch. Sizes and weights may vary based on selected features and custom configurations.

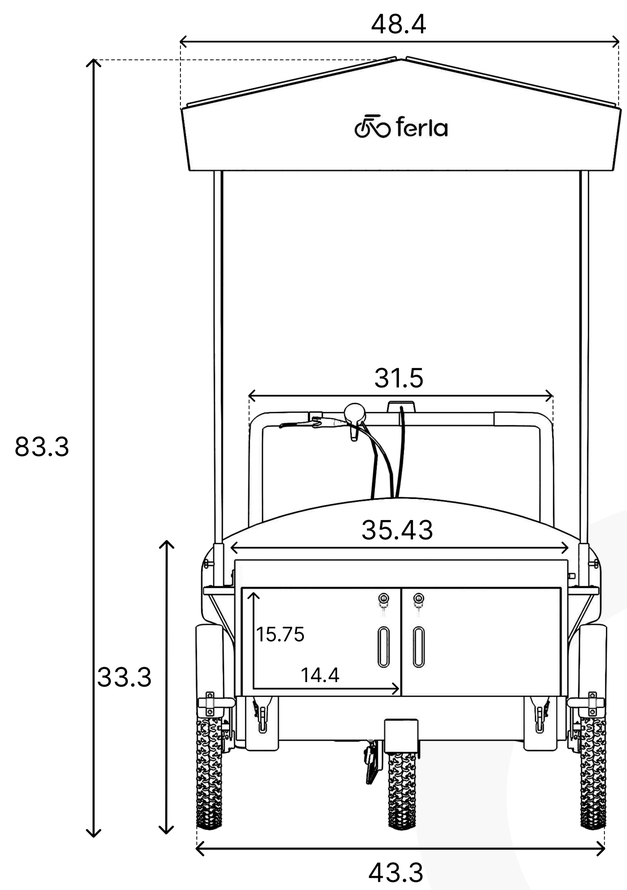

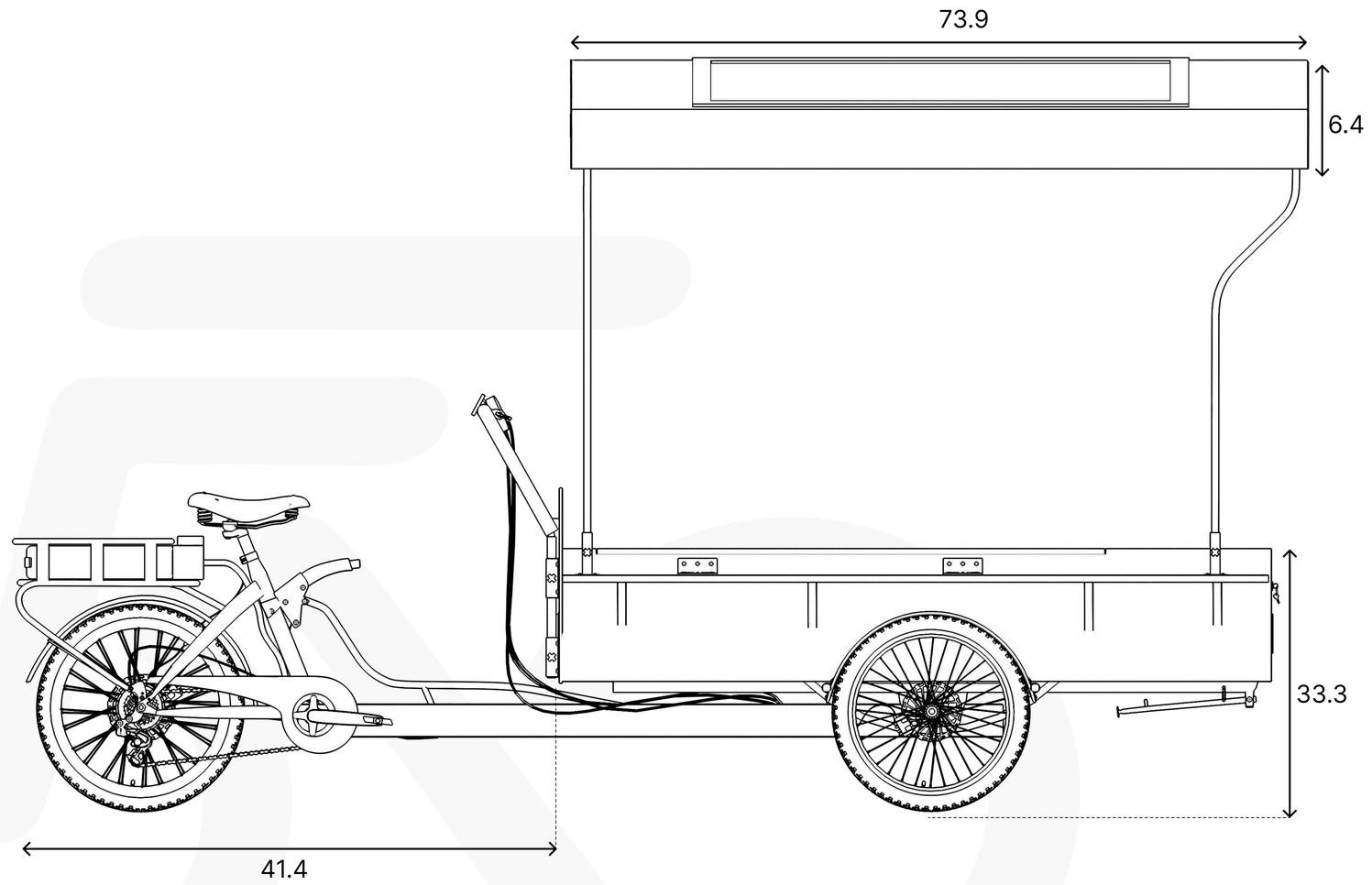

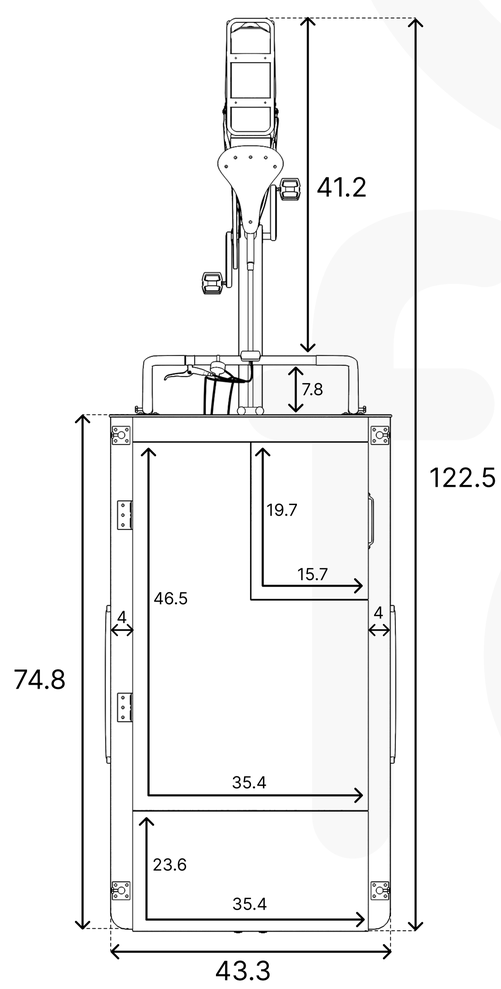

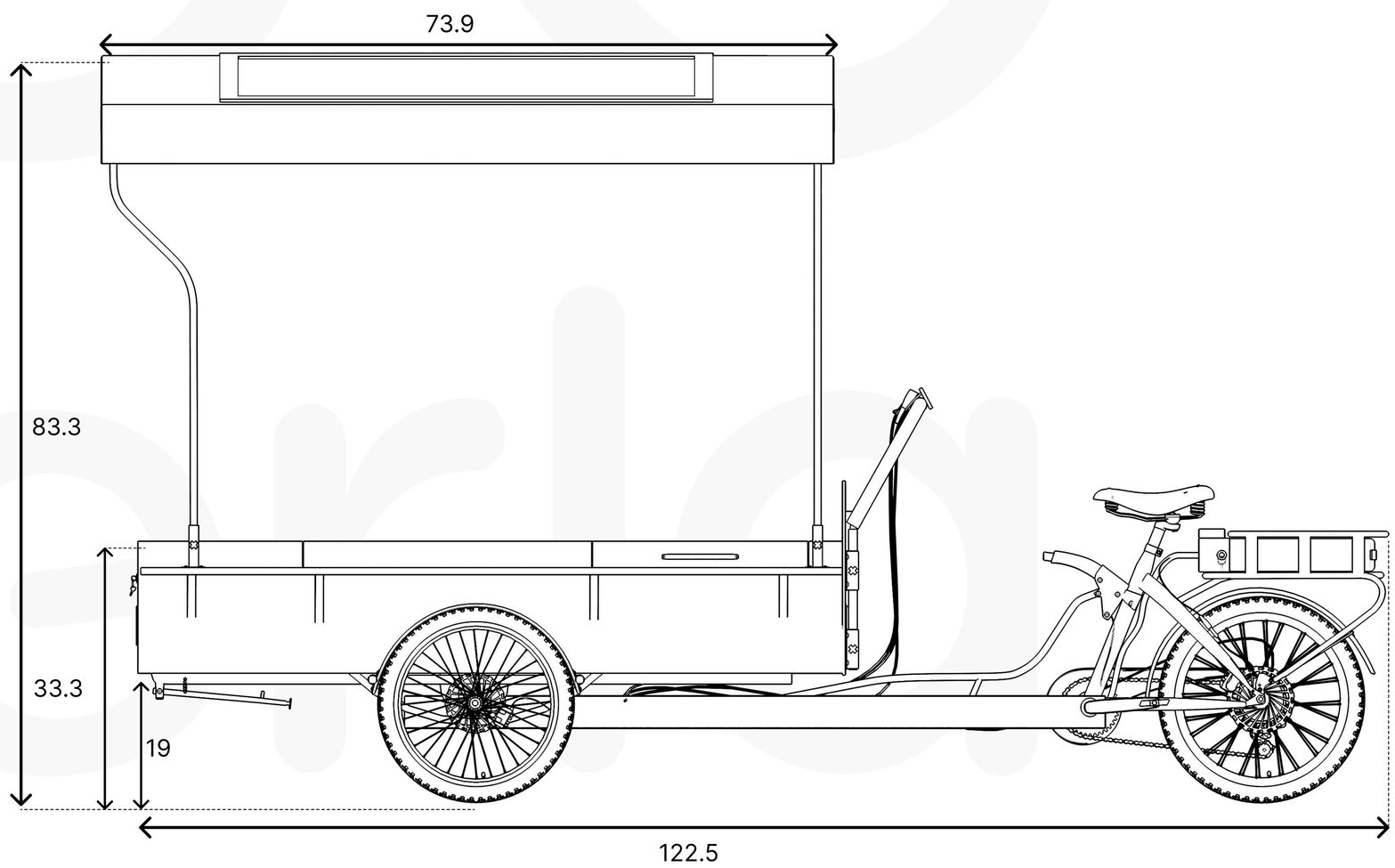

Dimensions

Full Length (Inc. Bike)	122.5”
Width/With Wheels	35.43”/43.30”
Height/With Canopy	33.3” / 83.25”
Gross Weight	750 lbs.
Max Load Capacity	500 lbs.
Work Surface	74” x 35.5”

Specifications

Material Box/Frame/Counter Top	NSF Grade Wood/Steel/Wood
Wheels and Tires	19" x 2.25" Puncture Resistant Fat Tires
Motor (Optional)	M145 500W/48 volt Rear Hub with up to 60nm Torque
Pedal Assist Battery (Optional)	48V/13AH Lithium Ion Battery, Certified CE, UN38.3, MSDS
Gears	Shimano 6 Speed System
Brake System	Teboka Mechanical Disc Brake System W/Integrated Parking Brake
Certifications & Protection	CE and ROHS Certified.IPX5 Waterproof Rating