Ferla X Bike
Dimensions and specifications

*All dimensions are rounded to the nearest half-inch. Sizes and weights may vary based on selected features and custom configurations.

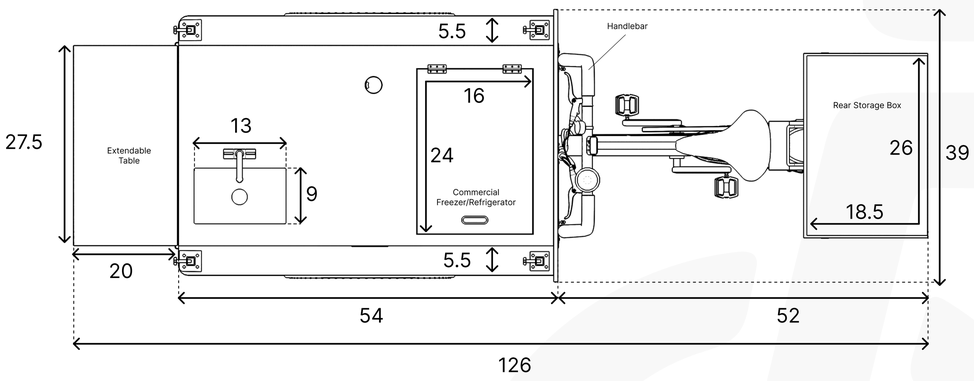

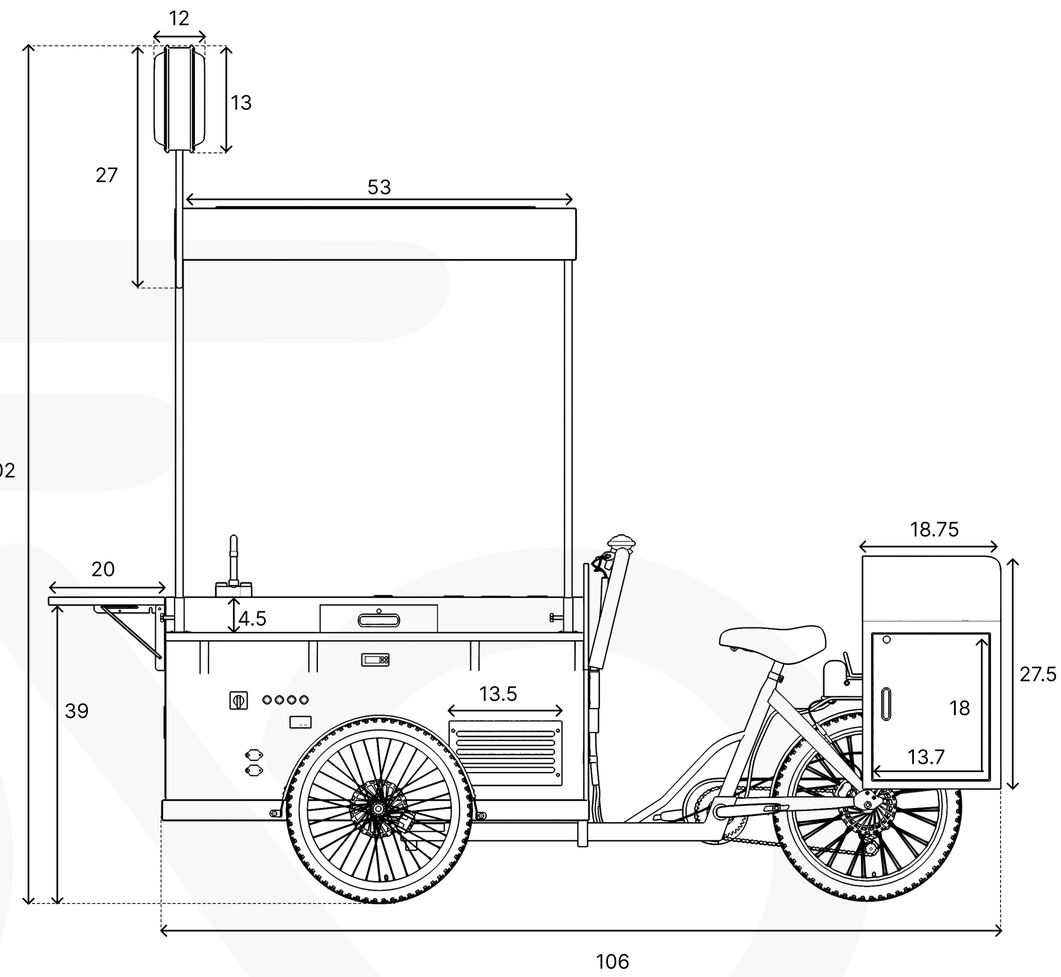

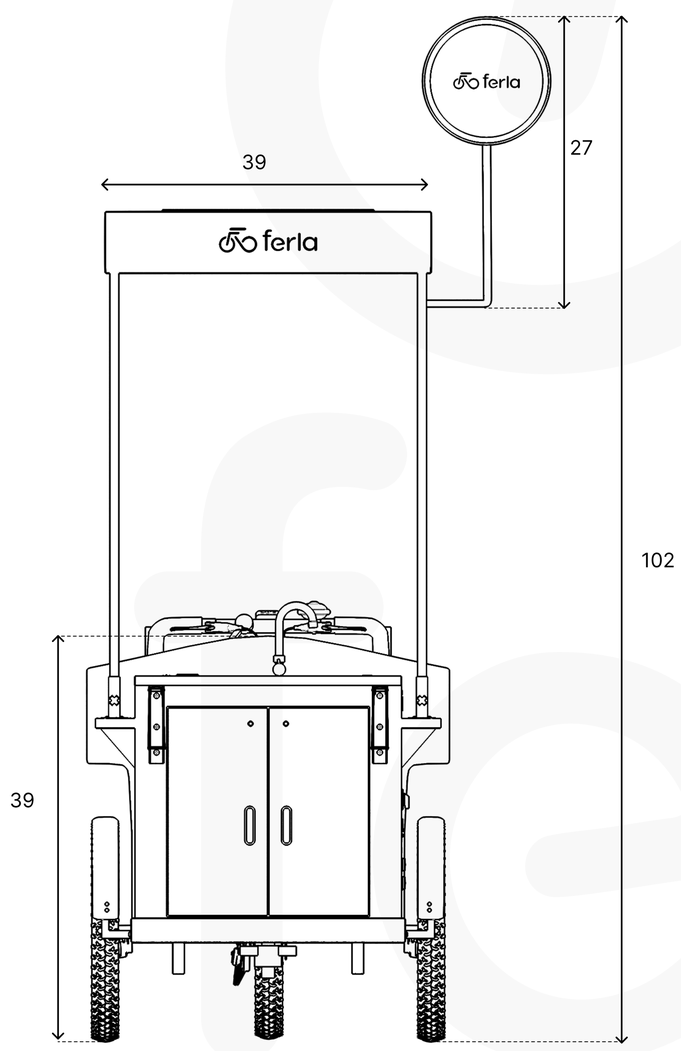

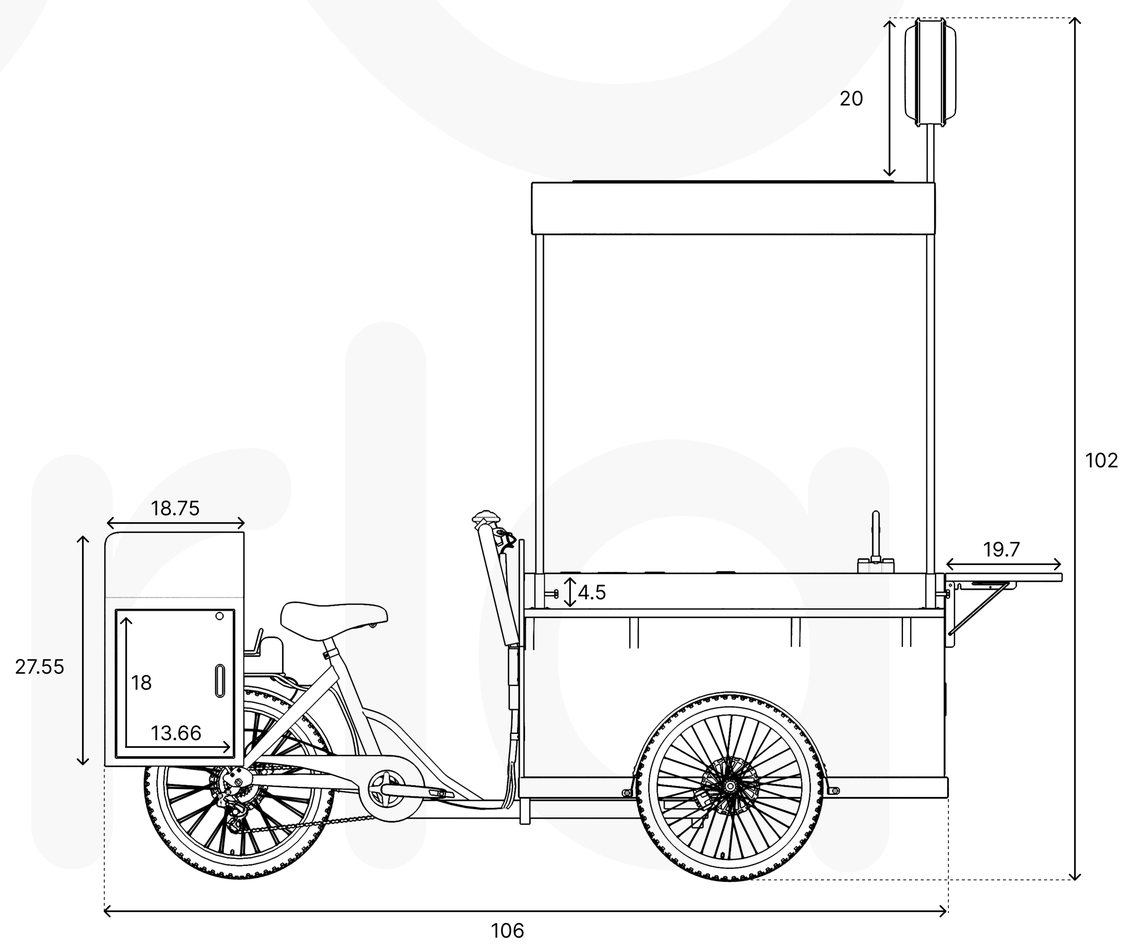

Dimensions

Full Length (Inc. Bike)	106”
Width/With Wheels	39” x 50”
Height/With Canopy/With LED Logo Sign	39”/86”/102”
Gross Weight	300-500 lbs.
Max Load Capacity	500 lbs.
Work Surface (inc. optional sink)	53” x 27.5”
Rear Stoarge Box Dimensions	18.89” x 26.18” x 27.5”
Rear Work Surface Dimensions	25” x 18.5”
WS Extendable Table Dimensions	27.5” x 19.5”
Sink Dimensions (Optional)	13” x 8” x 6”
Small Refrigerator/Freezer Internal Dimensions	20” x 12.5” x 18.5”
Solar Panel (Optional)	50.4” x 26” x 0.12”

Specifications

Material Box/Frame/Counter Top	NSF Grade Wood/Steel/Wood or Stainless Steel
Wheels and Tires	19" x 2.25" Puncture Resistant Fat Tires
Power System	100Ah AGM Deep Cycle Battery
Motor (Optional)	M145 500W/48 volt Rear Hub with up to 60nm Torque
Pedal Assist Battery (Optional)	48V/13AH Lithium Ion Battery, Certified CE, UN38.3, MSDS
Gears	Shimano 7 Speed System
Brake System	Pioway Front & Rear Hydraulic Brake System
Certifications & Protection	CE and ROHS Certified.IPX5 Waterproof Rating
Lighting	Overhead LED Canopy Lights and LED Logo Sign.
Water System (Optional)	Stainless Steel Sink, 5 Gal. Clean & Waste Water Tanks, Cold/Hot Faucet, Battery Operated Water Pump
Refrigerator/Freezer (Optional)	Battery Operated Commercial Grade Freezer with 1.74 Cu. Ft. of Refrigerator/Freezer space.
Solar Panel (Optional)	100W, VMP 18V, Imp 5.56 amp, Voc 220, Sc 6.1 A, 30 Degrees Flexible Bend