Ferla X Glacier
Dimensions and specifications

*All dimensions are rounded to the nearest half-inch. Sizes and weights may vary based on selected features and custom configurations.

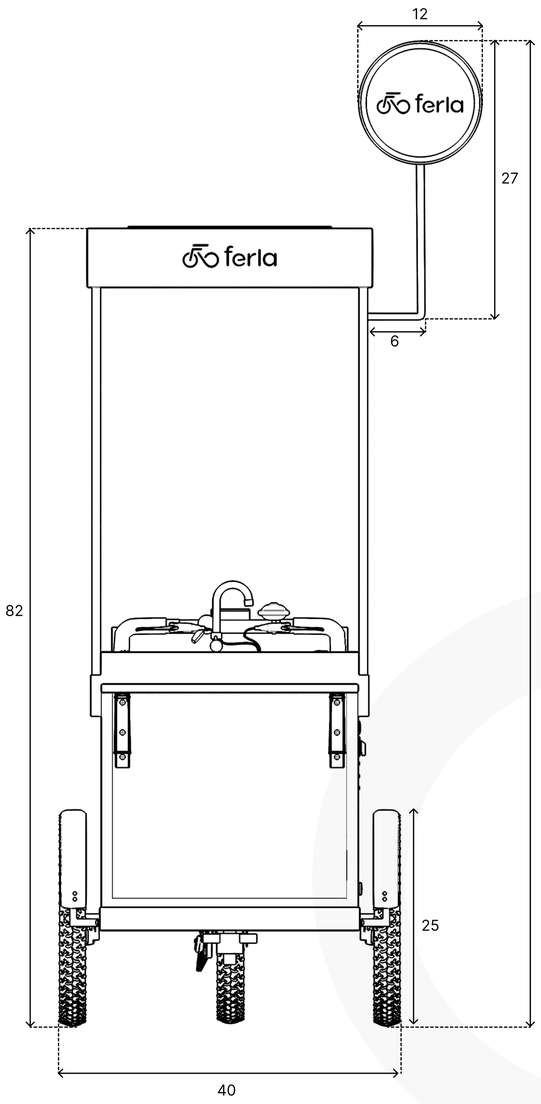

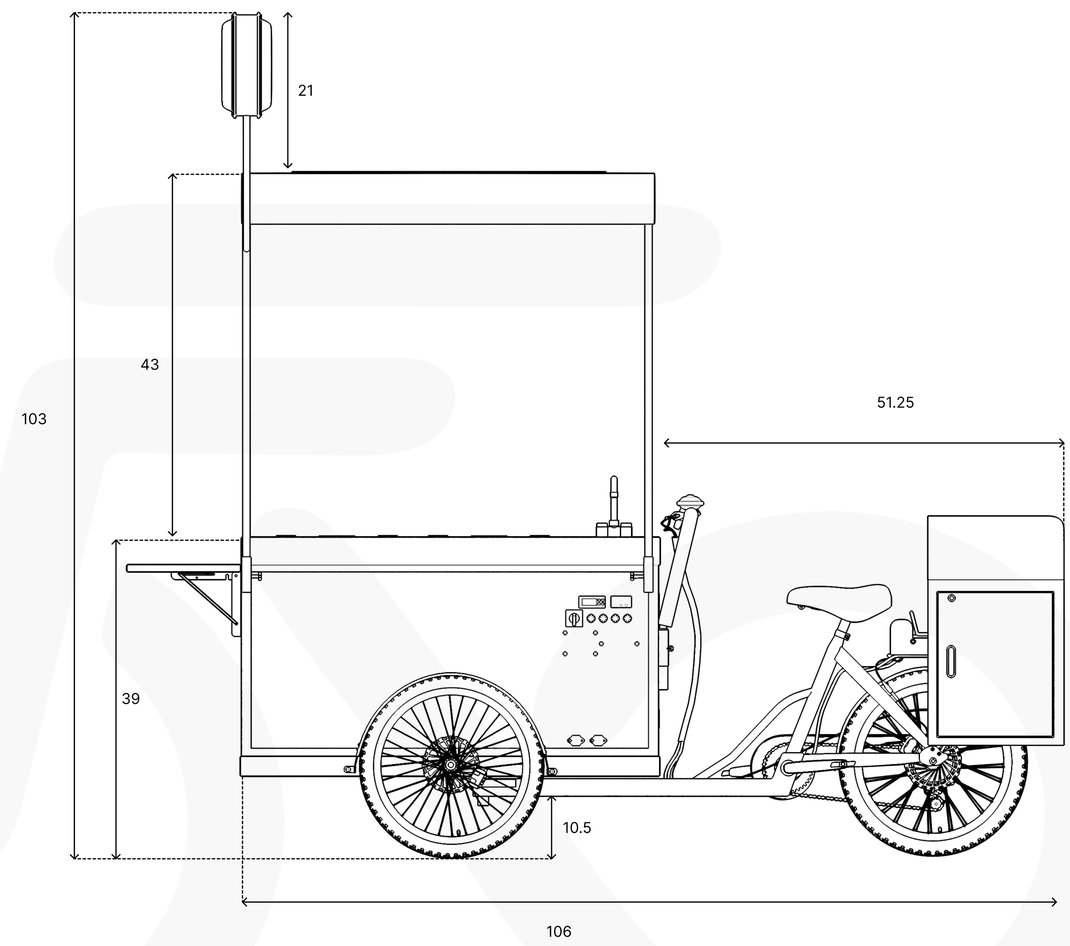

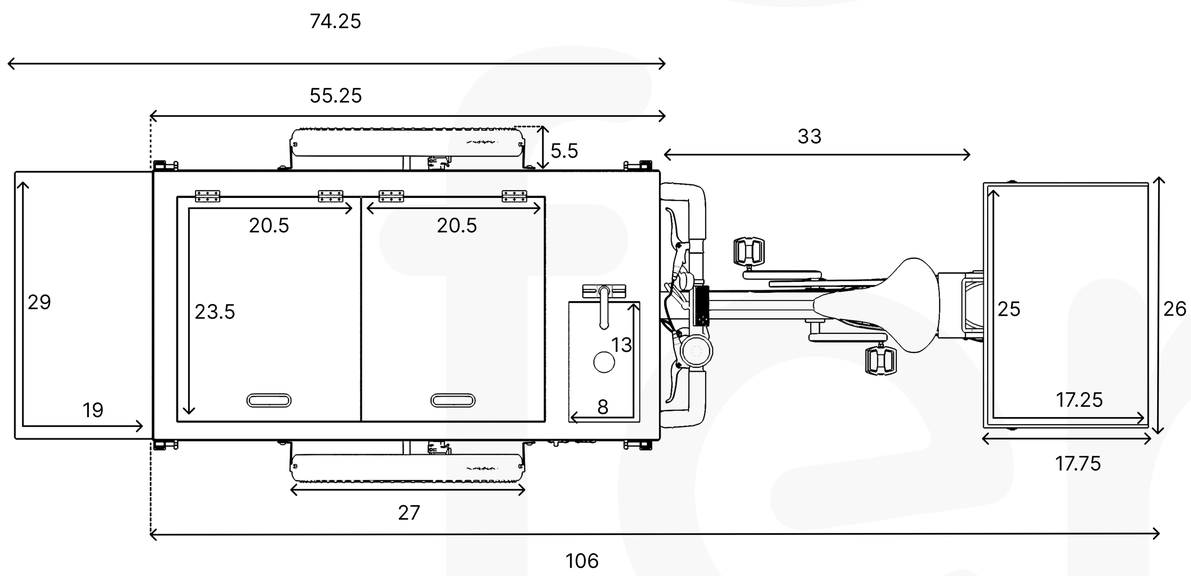

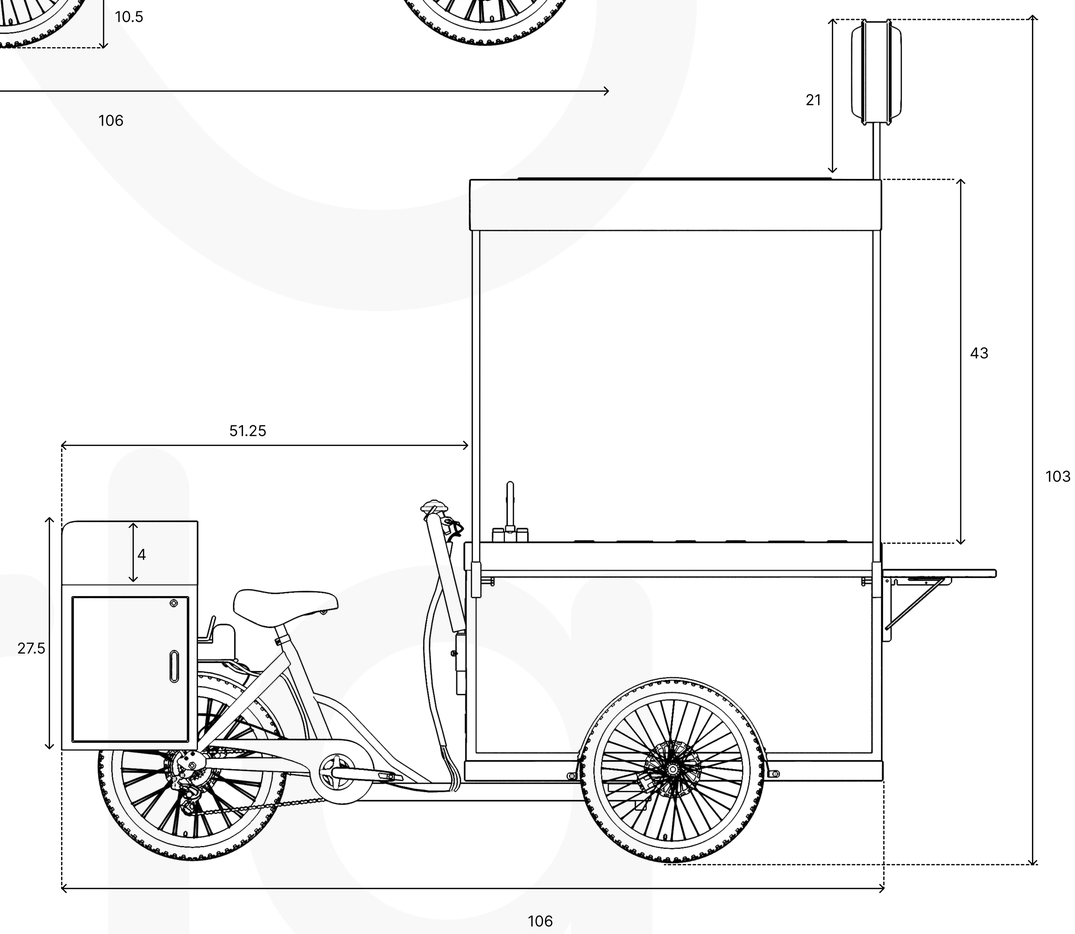

Dimensions

Full Length (Inc. Bike) / Extended Table	106” / 125”
Width/With Wheels	29” / 40”
Height/With Canopy/With LED Logo Sign	39” / 82” / 103”
Gross Weight	750 lbs.
Max Load Capacity	500 lbs.
Work Surface (inc. optional sink) / With Extended Table	15.10 ft² / 18.92 ft²
Rear Stoarge Box Dimensions	17.75” x 26” x 27.5”
Rear Work Surface Dimensions	17.25” x 25”
WS Extendable Table Dimensions	19” x 29”
Sink Dimensions	13” x 8” x 6”
Large Refrigerator/Freezer Dimensions	20.5" x 12.5" x 18.5"
Solar Panel (Optional)	50.4” x 26” x 0.12”

Specifications

Material Box/Frame/Counter Top	NSF Grade Wood/Steel/Wood
Wheels and Tires	19" x 2.25" Puncture Resistant Fat Tires
Power System	100Ah AGM Deep Cycle Battery
Motor (Optional)	M145 500W/48 volt Rear Hub with up to 60nm Torque
Pedal Assist Battery (Optional)	48V/13AH Lithium Ion Battery, Certified CE, UN38.3, MSDS
Gears	Shimano 7 Speed System
Brake System	Pioway Front & Rear Hydraulic Brake System
Certifications & Protection	CE and ROHS Certified.IPX5 Waterproof Rating
Lighting	Overhead LED Canopy Lights and LED Logo Sign
Water System	Stainless Steel Sink, 3.5 Gal. Clean & Waste Water Tanks, Cold/Hot Faucet, Battery Operated Water Pump
Large Refrigerator/Freezer	Battery Operated Commercial Grade Freezer with 3.00 Cu. Ft. of Refrigerator/Freezer space.
Solar Panel (Optional)	100W, VMP 18V, Imp 5.56 amp, Voc 220, Sc 6.1 A, 30 Degrees Flexible Bend